LOAD TESTING FOR

SHORING FRAMES – 21V FRAME

FOR

QINGDAO JING CHENG HUI MACHINERY AND TECHNOLOGY CO. LTD

OCTOBER 2016

BY

BUILDING CONSTRUCTION TEST LABORATORY

All load cells are calibrated by **NATA** accredited services and are in valid

1. Introduction

At the request of Mr. Jansen Qi of Qing Dao Jing Cheng Hui Machinery and Technology Co. Ltd, we attended a testing sessions on its sample of 21V shoring frames with a view to confirming their Working Load Limit. The test was carried out at 6 Gatwood Close, Padstow, NSW on 19 April 2016. The test load and method of testing evolved from consideration of the Australian Standard AS 3610: 1995, Appendix A, and AS 3610 Supplement 2: 1996, Appendix CA.

2. Test Apparatus

The test was carried out using a test loading frames with Hydraulic system with 4 cylinders capable to provide force from 0 to 30T each, Pumps. Digital reading and load cells 0-30t which has been calibrated by Precise Calibration Services Pty Ltd (PCS), a NATA accredited calibration company, valid to 05 January 2017.

Accessories include:
- LVL timber beams,
- loading bars and couplers,
- Folk lift truck,
- Rule, laser measures, and
- Levers

3. Specimen and test arrangement

The design drawings of test samples of 21V frame were shown in Attachment A.

The assembled shoring frame system includes two 2100mm high X 1171mm C-C shoring frames, two sets of braces, four base jacks and four U head jacks. The frames were separated by side braces at a horizontal distance of 1550mm. The load bearing frame tubes are OD 60mm and wall thickness of the tubes is 3.0mm. See Photo A.

The 2100mm high vertical members of the frames are supported on TR48 X 6.35mm tubular jacks at the base with an extension of approximately 500mm and an eccentricity of 20mm and at the top with U-head jacks with an extension of approximately 500mm and an eccentricity of 20mm. The height from supporting ground to the top of U head jack is 3008mm.

Shaped steel plates with 1:40 slope have been fixed under the jacks, as illustrated in AS 3610 Supp2-1996,, Appendix CA. See Attachment B and Photo A.

The test arrangement of the assembly frames is eccentricities parallel to the frames consists of two frames connected together with their side braces. Four hydraulic jacks, connected to the identical pump system, apply the test load to a grid of beams. The upper transverse beams are located centrally above the frame legs. The beams which span between the frames are located eccentric to the legs. See Photos C.
As this test arrangement is worse, in terms of assembly stability and strength, than the arrangement of "eccentricities at right angles to the frames". Therefore, the test result shall be conservative for assessing the assembly's capacity.

4. Test Method

Destructive testing method has been applied for this test, as described in AS/NZS 3610.

4.1 Sample size

The sample size for this testing is one.

4.2 Strength Limit State Load Capacity

Strength limit state load capacity shall be calculated by
R = X / Ks
Where
X : Ultimate State (US) derived from test result.
Ks: Based on Table A1 and A2, and A.4.4.3 of AS 3610:1995, we select value of modification factor as 0.15. Further, we select value of confident of variation 0.15, and value of sampling factor as 1.9.

4.3 Working Load Capacity

A realistic and conservative assumption for limit state factor for this application is 0.8.
L = 0.8R

5. Test, Results and Observations

The testing results and observations are set in Table 1 below.

Status	Ultimate State (KN)	Observation
Eccentricity parallel to frames	90.3	Excessive deformation on frame tubes leading failure was observed.

Table 1: Testing Results and Observations

6. Strength Limit State and Working Load Capacity

Using the test data in Table 2 and the equation above in S4.3, the Strength Limit State and working load capacity per leg of the 18V frame are converted in Table 2 below.

Status	Strength Limit State Capacity (R=X/1.9) (KN)	Working Load Capacity (KN) (0.8R)
Parallel to frames	47.5	38.0

Table 2: Strength Limit State and Working Load Capacity of 21 V Frame per Leg

4. Conclusion

Using destructive testing method, the recommended Working Load Capacity for the sample assembly of Jing Cheng Hui 21 V shoring frames has been obtained through the test method specified in AS 3610: 1995.

At supporting height of **3m**, the working load capacity is **38KN per leg** when the eccentricities are all parallel to the frame, and on uneven supporting ground of 1:40 slope.

The limitation of the small sampling in this test indicates that the results should not represent working load capacity for all 21V shoring frame products. More reliable information in regards the capacity should be obtained from tests with a reasonably large sampling process. This including the possibility that the population WLC for the product may be higher than 38KN per leg, if the test sample is more than one and the quality of the product is identical.

The test is supervised by

Lida Song
B.E., M.E. PhD (Civil Eng), C.P. Eng, NPER (659737), RPEQ (14348)

Signature:

Attachment A: Design Drawings (3) of the 18V Shoring Frame

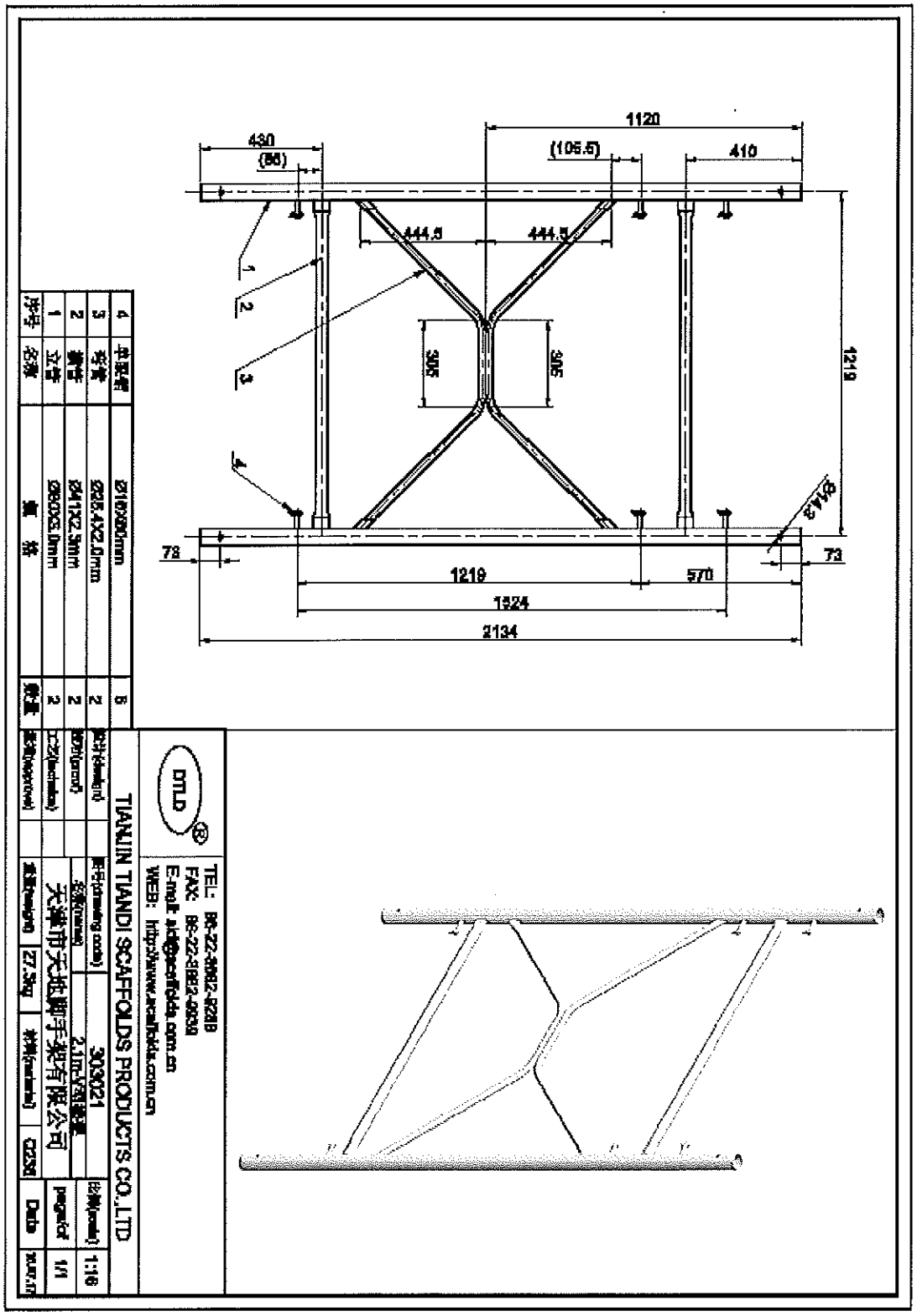

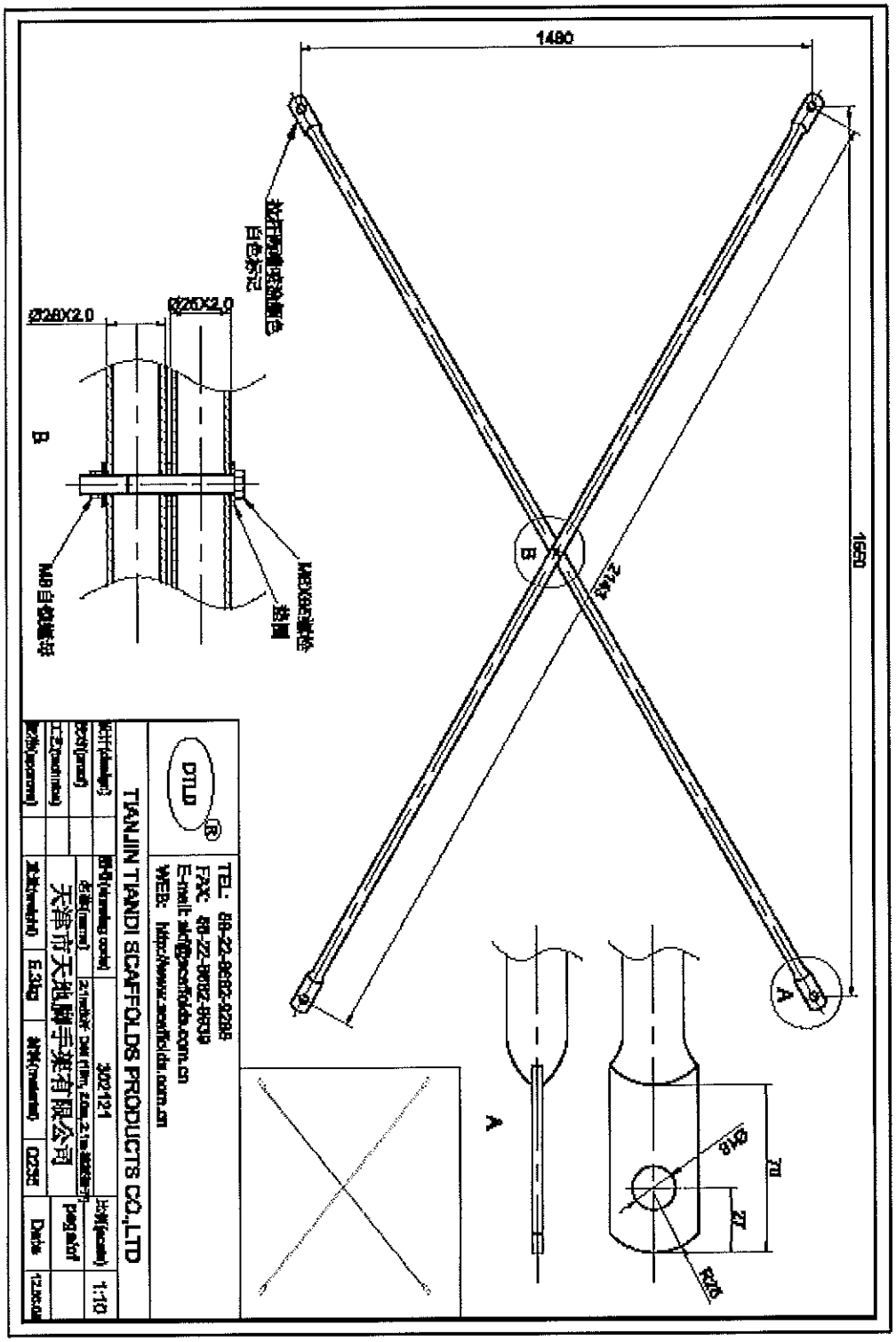
1480
1650
2145
B
A
Ø26X2.0
Ø28X2.0
M8自锁螺母
铆圆
R26
27
70
TEL: 86-22-8602-9288
FAX: 86-22-8602-8639
E-mail: sales@scaffolds.com.cn
WEB: http://www.scaffolds.com.cn
DTLD
TIANJIN TIANDI SCAFFOLDS PRODUCTS CO.,LTD
302121
1:10
天津市天地脚手架有限公司
Date
C052
E3pg
pag.a/.pf

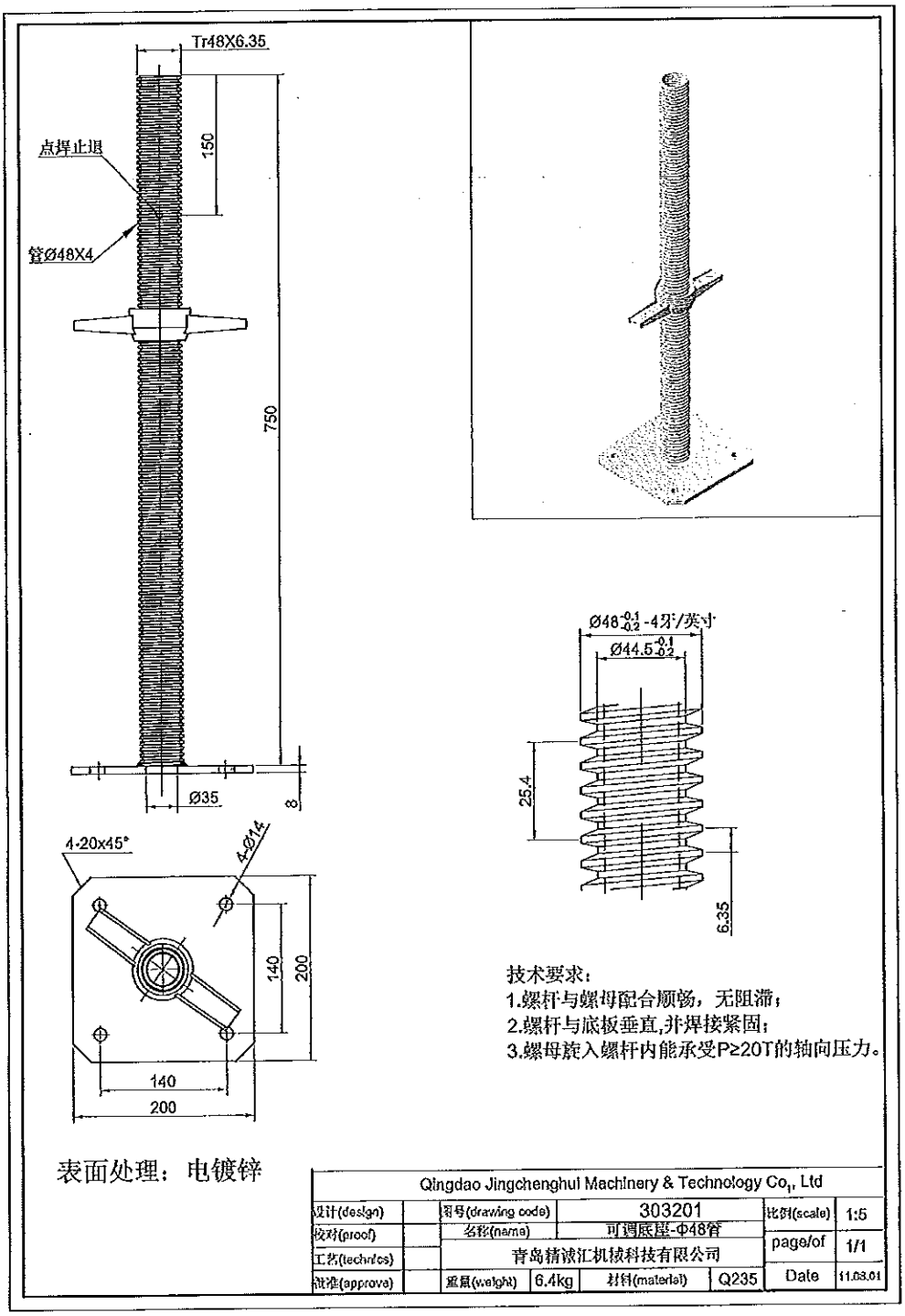
Tr48X6.35
点焊止退
管Ø48X4
150
750
Ø35
8
4-20x45°
4-Ø14
140
200
140
200
Ø48 -0.1 -0.2 -4牙/英寸
Ø44.5 -0.1 -0.2
25.4
6.35
技术要求：
1.螺杆与螺母配合顺畅，无阻滞；
2.螺杆与底板垂直,并焊接紧固；
3.螺母旋入螺杆内能承受P≥20T的轴向压力。
表面处理：电镀锌
Qingdao Jingchenghui Machinery & Technology Co., Ltd
设计(design)
图号(drawing code)
303201
比例(scale)
1:5
校对(proof)
名称(name)
可调底座-Φ48管
工艺(technics)
青岛精诚汇机械科技有限公司
page/of
1/1
批准(approve)
重量(weight)
6.4kg
材料(material)
Q235
Date
11.03.01

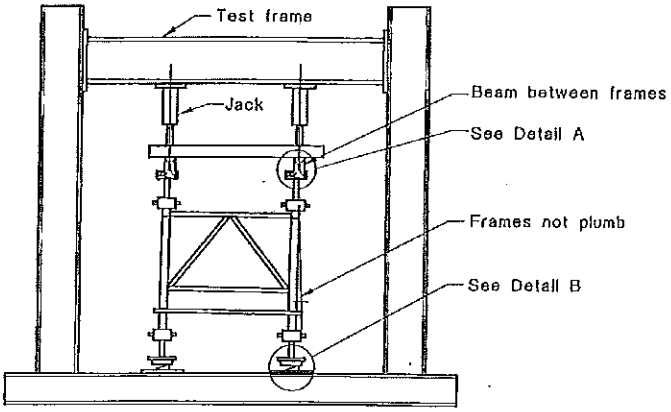

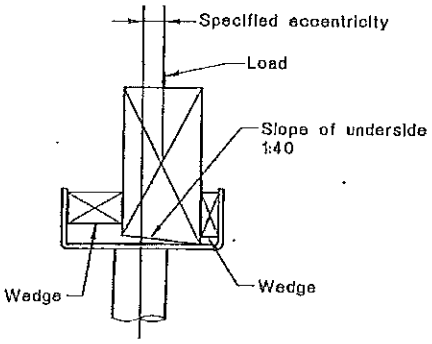

DETAIL A

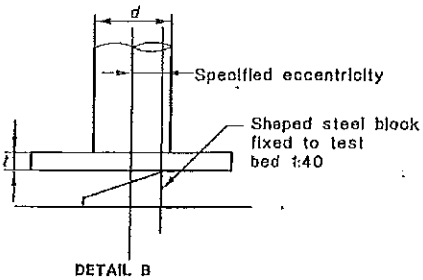

DETAIL B
for specified eccentricity
less than $(\frac{d}{2}+t)$

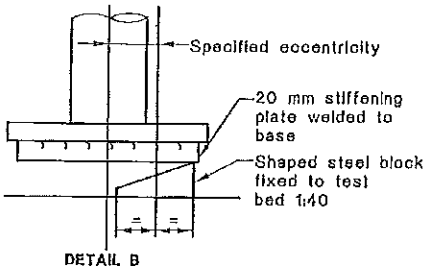

DETAIL B
for specified eccentricity
greater than $(\frac{d}{2}+t)$

Attachment B: Test Arrangement Details

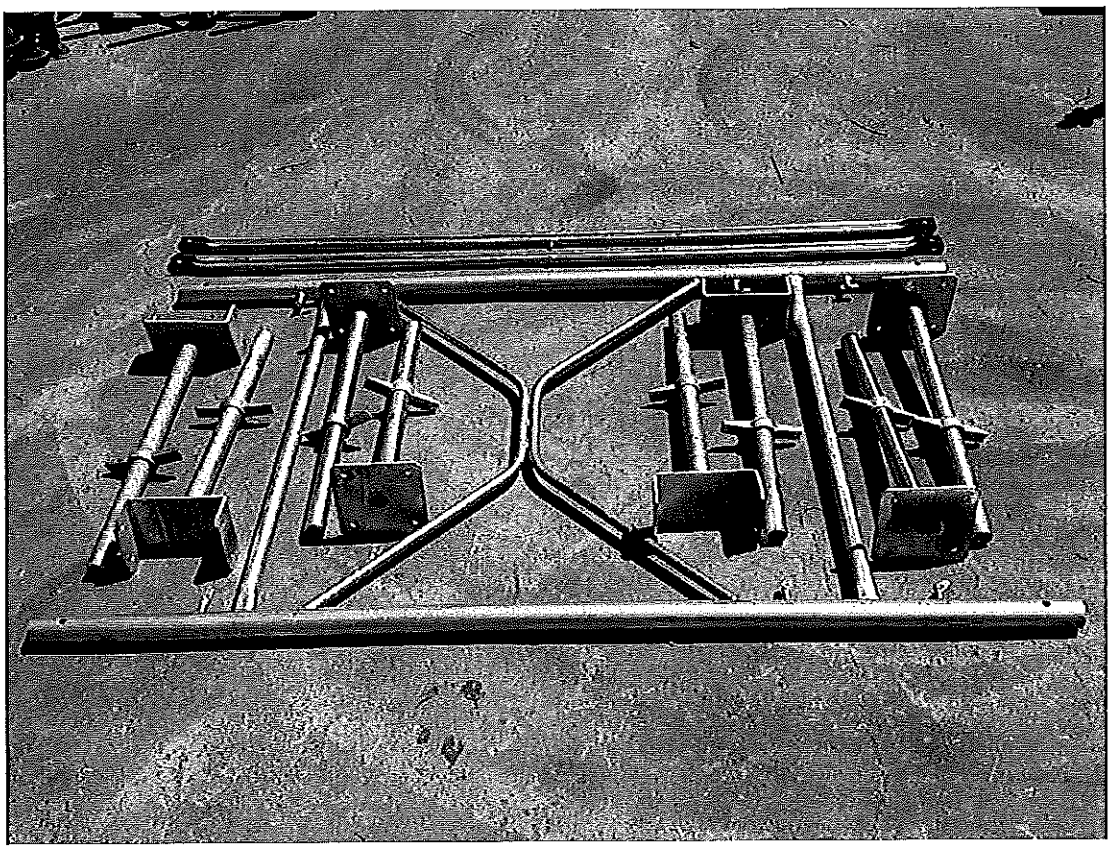

Photo A: Test Sample

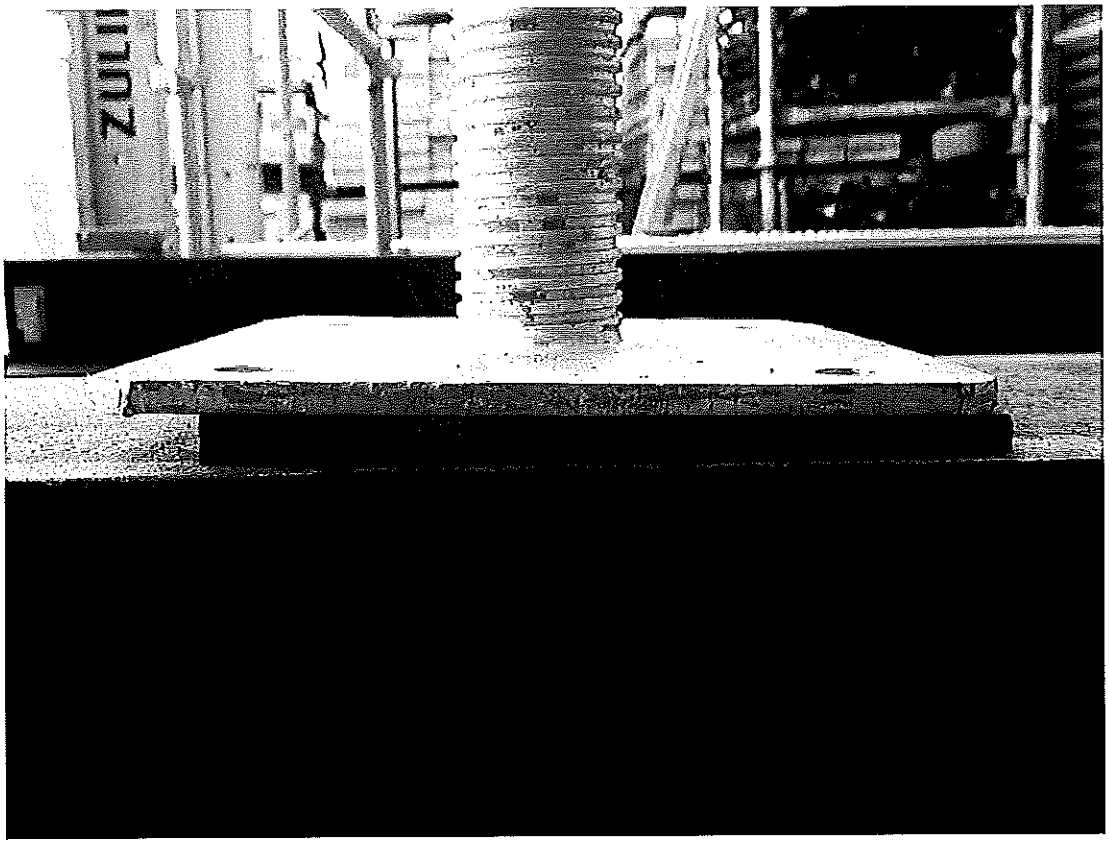

Photo B: Base Slope Arrangement

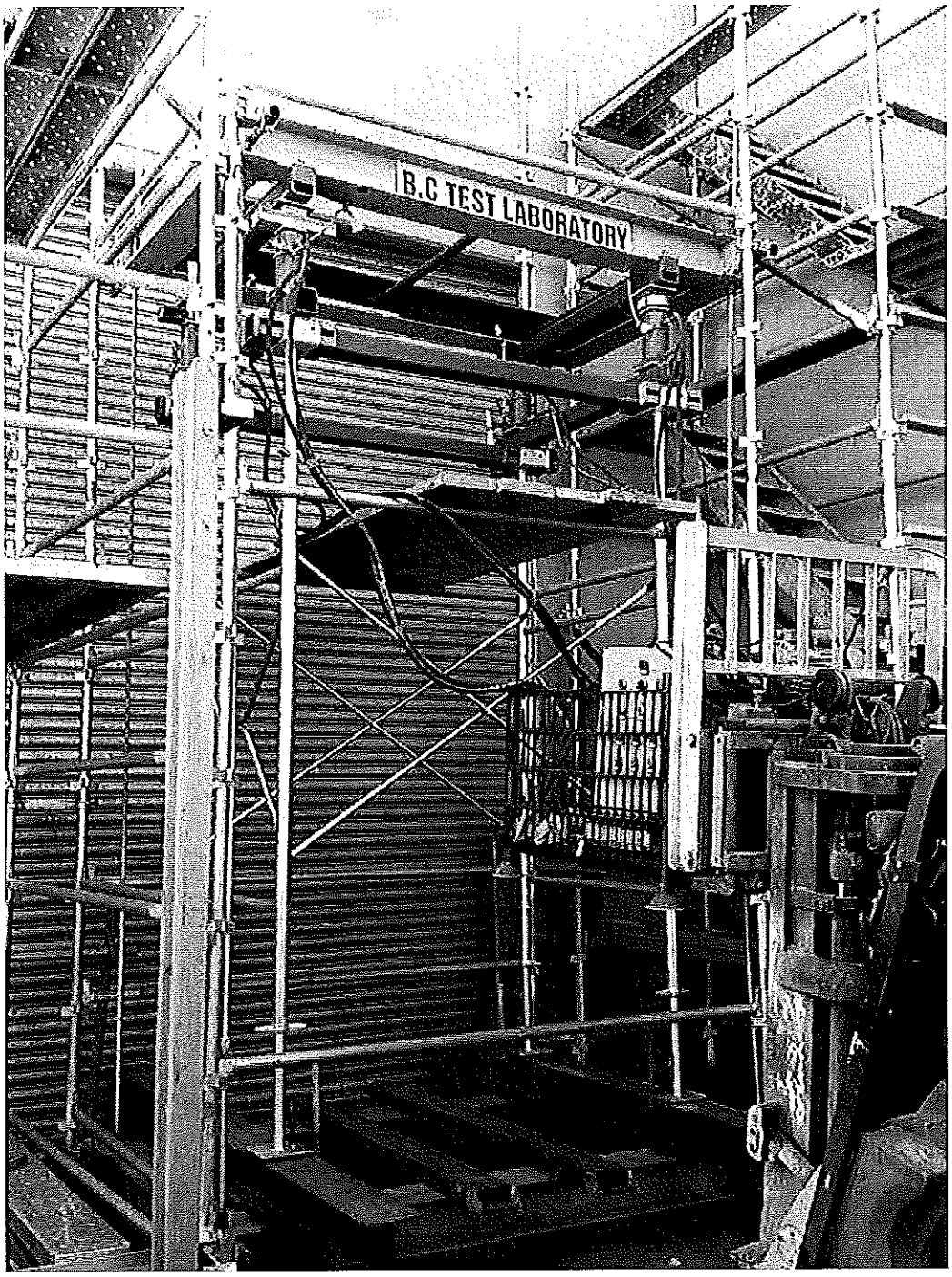

Photo C: The assembly under load with eccentric arrangement